iGarden

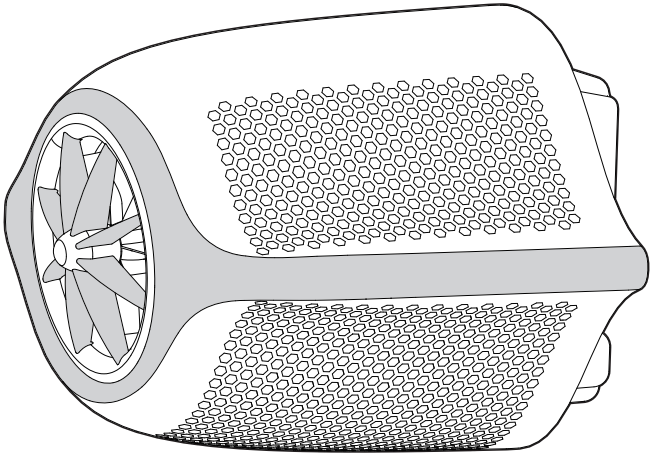

iGarden Swim Jet P Series

USER MANUAL

Please read this manual carefully before installing and operating your Swim Jet P Series, and keep this manual for future reference to ensure safe and effective use.

Table of Contents

1 Warning and Important Safety Instructions 01

1.1 When installing and using this device, please follow the safety rules below

1.2 Child Safety

1.3 User Restrictions

2 Environmental Conditions for Swim Jet P Series 03

3 Technical Specifications 04

4 Configuration Table and Corresponding Accessories Diagram 05

4.1 Accessories Diagram

4.2 Configuration Table

5 Installation of Swim Jet P Series 06

5.1 Overall Structural Dimensions of the Jet

5.2 Control box Installation for the Swim Jet

5.3 Installation Diagram of the Swim Jet

5.4 Control Box Installation Diagram for the Swim Jet

5.5 Electrical Installation

5.6 Mounting Bracket Configuration Guide

5.7 Non-Penetrating Bracket Installation for the Swim Jet

6 How to use Swim Jet P Series 17

6.1 Pre-Use Checklist

6.2 Control Panel Overview

6.3 Mode Descriptions

6.4 Speed Adjustment

6.5 Timer Setting

7 Remote Control 22

7.1 Power On

7.2 Power Off

7.3 Battery Management

7.4 Storage Requirements

7.5 Remote Re-Pairing

8 APP Control 25

8.1 Downloading the APP

8.2 Account Registration and Login

8.3 Adding a Device and Network Pairing

8.4 Interface Functions

9 Product Maintenance and Care 29

10 Malfunctions and Protection 30

10.1 Fault Detection

10.2 Fault Code Table

10.3 Common Issues and Solutions

10.4 Speed Reduction Protection

11 Warranty and Exclusion Terms 34

11.1 Limited Warranty

11.2 To make a warranty claim

12 Disposal of End-of-Life Equipment 37

12.1 Equipment Decommissioning

12.2 Disposal

13 Certification Standards 38

1 Warning and Important Safety Instructions

Before installation, please read and follow all instructions carefully:

Before installing or using this product, you must read this manual, follow all safety instructions, and keep the manual properly for future reference.

1.1 When installing and using this device, please follow the safety rules below:

Before each use, inspect the Swim Jet, the control box, and the cable for any signs of damage or wear. If you encounter equipment damage(s), stop using the products and contact iGarden Customer Support or your local authorized dealer. We will assist you in arranging repair, replacement, or other warranty services in line with our warranty policy.

Do not operate the device until you fully understand the potential consequences of any adjustments to the control box.

Before starting, make sure there are no people near the inlet or outlet areas of the Swim Jet.

Avoid placing fragile items around the Swim Jet.

Avoid putting pressure on the Swim Jet (for example, do not sit, straddle, or step on it) to prevent equipment damage and ensure personal safety.

Swim cap and goggles must be worn when using this machine.

Please consult your physician before your first use if you have any pre-existing health conditions, especially heart disease, hypertension, back or joint problems, or if you are pregnant. If you experience chest pain, tightness, shortness of breath, or dizziness **during use**, stop immediately and seek medical advice. Consult your doctor before using the product again.

Never dive while using the Swim Jet.

Before using the Swim Jet, make sure there are no obstacles nearby and that the device is fully submerged in water.

If the machine will not be used for a long time, disconnect the power.

- ⚠ Warning: Do not insert any objects into the front outlet opening.
- ⚠ Warning: Do not allow any objects (such as leaves, paper, or plastic bags) to cover or block the Jet housing's water inlet or outlet.
- ⚠ Warning: Do not operate the device if there is ice in the pool.
- ⚠ Warning: Do not connect the device to a power source that does not meet the device's rated voltage requirements 110V-120V. Doing so may cause device malfunction, fire, or electrical hazards, leading to irreversible damage and safety risks.

- ⚠ Warning: Do not plug in or unplug the jet cable while the device is running.
- ⚠ Danger: If your body temperature is significantly higher than normal, stop using this device immediately. Continuing to use it could lead to serious consequences, including loss of consciousness or drowning.
- ⚠ Danger: Do NOT wet the Jet's connectors. Do NOT handle the circuit breaker or the Jet's connectors with wet hands. Do NOT plug or unplug the Jet's connectors when the Jet is running.
- ⚠ Danger: Always disconnect the power before performing any maintenance or repair on the Jet. Doing so ensures operator safety and prevents electrical accidents or equipment damage.
- ⚠ Warning: If the cable length is too long and the cable needs to be coiled into a circle, the diameter of the circle must be no less than 400 mm. If it needs to be coiled into multiple circles, please ensure that the diameter of each circle is no less than 400 mm, and it must be divided into multiple single circles on the ground.
- ⚠ Warning: This product's power cord is equipped with a Ground Fault Circuit Interrupter (GFCI). Test the GFCI before each use as follows:

Testing Procedure:

1. While the control box is displaying normally and the Jet unit is not started, press the TEST button on the GFCI. The control box should immediately stop displaying.
2. Press the RESET button on the GFCI. The control box's buttons should light up immediately.
3. If the control box fails to light up after pressing the RESET button, a ground fault may exist, posing a risk of electric shock. Immediately cut off the power and contact iGarden Customer Support or your local authorized dealer.

Note:

If an internal component fails, the built-in chip will automatically detect this, and the self-test fault indicator will continuously flash. In this case, stop using the device immediately and contact iGarden Customer Support or your local authorized dealer.

1.2 Child Safety:

- Do not allow the underaged to use this product without adult supervision.
- Always closely supervise the underaged while they are using this product.

1.3 User Restrictions:

- Individuals with limited physical, sensory, or mental capabilities should not use this product unless supervised by qualified personnel.
- Do not use this product after consuming alcohol, medication, or any substances that may impair your reaction or judgment.

2 Environmental Conditions for Swim Jet P Series

- Operating temperature for control box: 0°C to 43°C (32°F to 109°F).

  (Must be installed in a dry, non-condensing location, away from direct sunlight and rain.)

- Recommended installation depth (center of Jet to water surface): 250–350 mm (9.8"–13.8").

  (Ensure the Jet is fully submerged.)

- Operating water temperature range: 5°C to 40°C (41°F to 104°F).

Pool Water Quality Requirements:

Users of the Swim Jet P Series are responsible for ensuring optimal conditions for maximum product lifespan. To maintain warranty coverage, maintaining water quality within the recommended range can help extend product life, so as to keep your warranty valid.

Maintain pool water within the following parameters:

- pH level: 7.0–7.8
- Combined chlorine: ≤0.5 mg/l
- Free chlorine: 0.3–2.0 mg/l
- Cyanuric acid: ≤100 mg/l
- Salt concentration: ≤0.4% (4000 ppm)
- Metal content: ≈0 mg/l
- Carbonate hardness: ≥2°dH
- Ozone: 0 mg/l
- Total chlorite and chlorate: ≤30 mg/l
- ORP (Oxidation-Reduction Potential): ≥700 mV

Unintended Use:

- Do not operate in potentially explosive areas.
- Do not operate under harsh environmental conditions (including gases, acids, vapors, chemicals, or oils).
- Do not use with sewage water.

3 Technical Specifications

Detailed Technical Parameters for Each Model of Swim Jet P Series				
Model Name	P100	P160	P200	P230
Power Supply Voltage (V AC)	110-120V	110-120V	110-120V	110-120V
Frequency Range (Hz)	60	60	60	60
Input Power (hp/W)	0.6hp (400W)	0.8hp (600W)	1.2hp (900W)	1.6hp (1200W)
Input Current (A)	3.2	5.4	8.0	11.4
Maximum Flow Rate (GPM)	450	720	850	1100
Maximum Outlet Flow Velocity (ft/s)	7.9ft/s	9.5ft/s	11.5ft/s	13.1ft/s

4 Configuration Table and Corresponding Accessories Diagram

4.1 Accessories Diagram

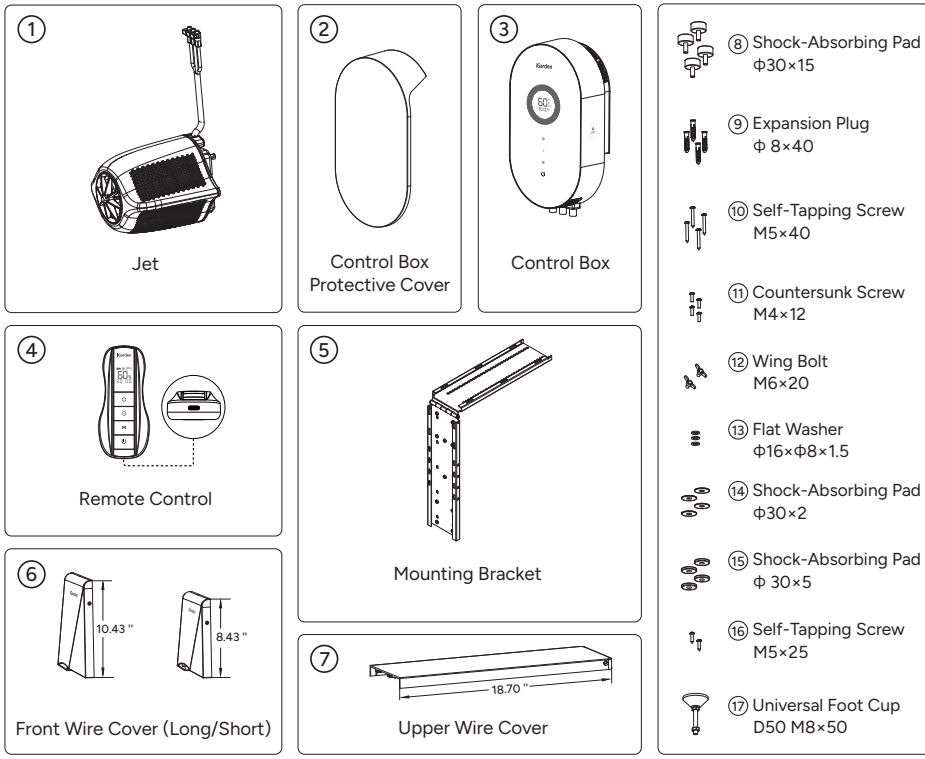

4.2 Configuration Table

No.	Item Name	Quantity
①	Jet	1
②	Control Box Protective Cover	1
③	Control Box	1
④	Remote Control	1
⑤	Mounting Bracket	1

⑥	Front Wire Cover (Long/Short, Optional)	1
⑦	Upper Wire Cover	1
⑧	Shock-Absorbing Pad Φ30×15	4
⑨	Expansion Plug Φ8×40	6
⑩	Self-Tapping Screw M5×40	6
⑪	Countersunk Screw M4×12	4
⑫	Wing Bolt M6×20	2
⑬	Flat Washer Φ16×Φ8×1.5	3
⑭	Shock-Absorbing Pad Φ30×2	4
⑮	Shock-Absorbing Pad Φ30×5	4
⑯	Self-Tapping Screw M5×25	4
⑰	Universal Foot Cup D50 M8×50	1

5 Installation of Swim Jet P Series

5.1 Overall Structural Dimensions of the Jet

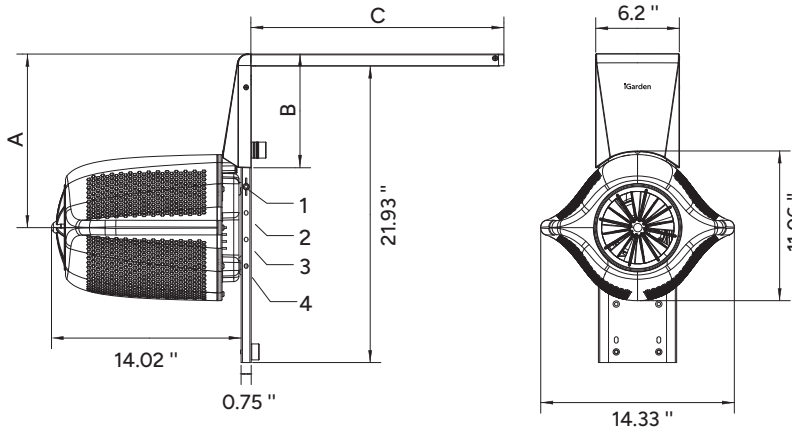

Based on the distance A between the center of the Jet and the pool edge, different types of front cable covers can be selected. See the table below for details

Mounting Position of Jet	Distance A (Center of Unit to Pool Edge)	Front Cable Cover Length (B)	Upper Cable Cover Length (C)
1	12.00"	8.43"	18.70"
2	13.98"	10.43"	18.70"
3	15.95"	10.43"	18.70"
4	17.91"	10.43"	18.70"

5.2 Control Box Installation for the Swim Jet

5.2.1 Control Box Dimensional Diagram:

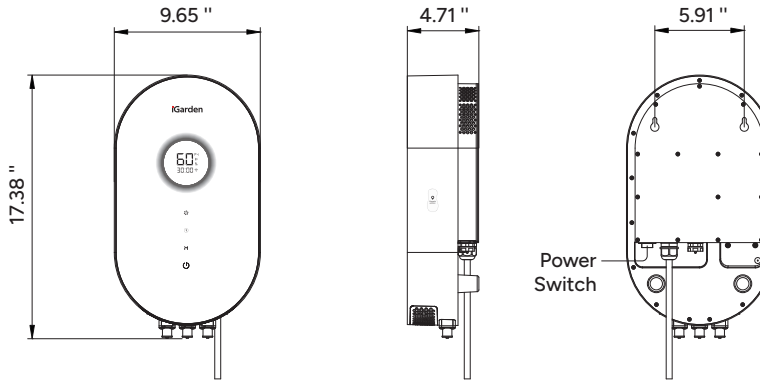

5.2.2 Control Box Installation Precautions:

⚠ **Danger:**

Ensure the power switch is turned off before installation to prevent accidental startup and potential injury.

Installation Environment:

- Install the control box at least 9.8 ft (3 meters) away from the edge of the pool, in a well-ventilated, dry, and non-condensing area. Avoid direct exposure to rain or pool water splashes.
- For outdoor installations, it is recommended to install a protective cover panel to enhance weather resistance.
- To ensure proper heat dissipation, maintain at least 0.98 in (25 mm) of clearance on all sides of the control box, except the side mounted against a wall.

- Mounting Height: The control box should be installed at a minimum height of 3.9 ft (1.2 meters) above ground level to prevent access by children and avoid accidental contact.
- Protective Cover: Keep the protective cover securely closed during operation to prevent unintended contact by children. When not in use, the cover also serves to protect against sunlight and rain, helping extend the product's lifespan.

5.3 Installation Diagram of the Swim Jet

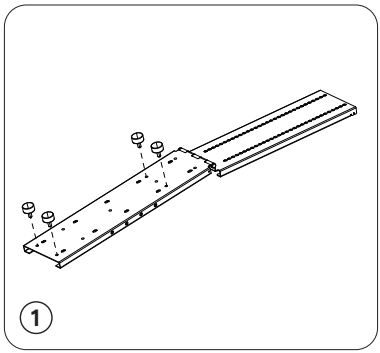

Install four ⑧ **Shock-Absorbing Pads Φ30×15** on the back of the mounting bracket.

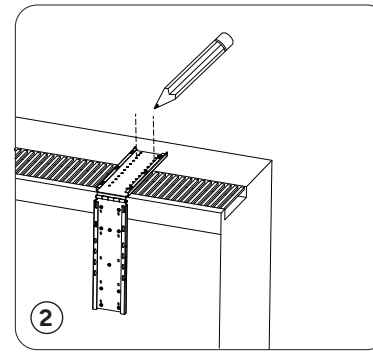

Place the bracket flat onto the pool deck surface and mark the positions of the mounting holes.

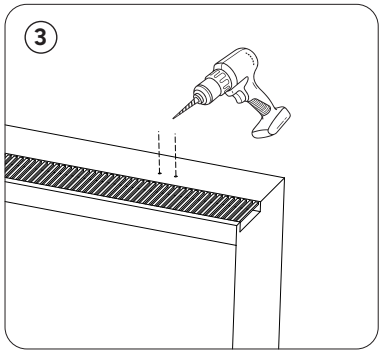

Drill holes at the marked positions. Recommended drill bit diameter: 5/16"; hole depth: 1.8".
Caution: Avoid electrical wiring, gas pipes, and water pipes to prevent damage.

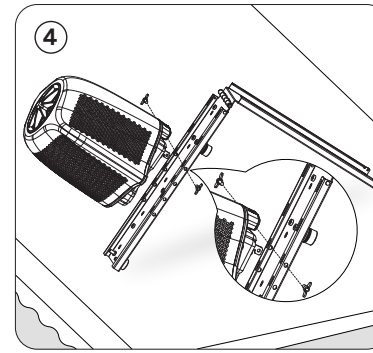

Align the mounting hooks on the Jet with the bracket openings and mount the unit. Tighten the ⑫ **Wing Bolts** to secure the Swim Jet. Adjust the **adjustable foot pad** on the Swim Jet to ensure the unit remains level after installation.

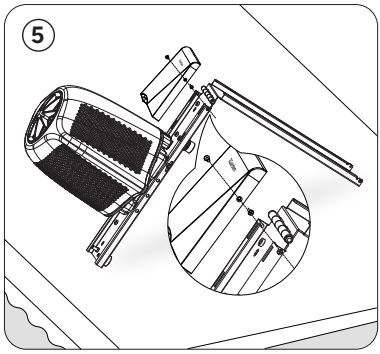

Select the appropriate **front cable cover** based on the height from the water surface to the pool deck. Secure it using ⑪ **M4 countersunk screws**.

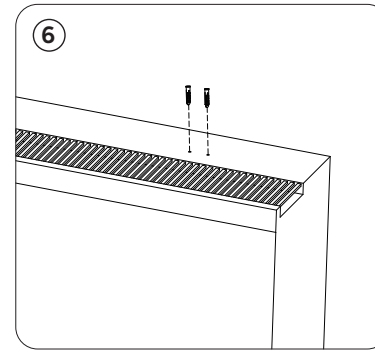

Install the ⑨ **Expansion Plugs Φ8×40** into the pre-drilled holes.

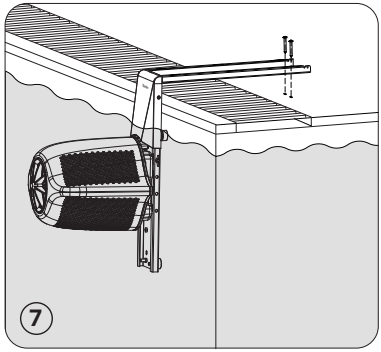

Place the Jet into the water. Align the bracket holes with the expansion plug holes, then tighten the ⑩ **Self-Tapping Screws** into the ⑨ **Expansion Plugs** to secure the bracket assembly.

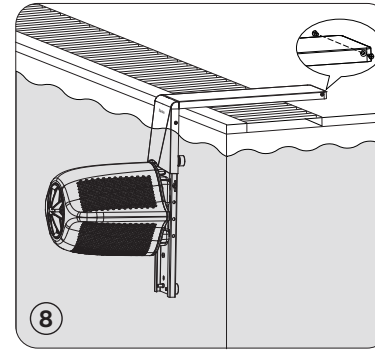

Insert the hooks of the **upper cable cover** into the corresponding openings on the bracket, then slide it forward until it fits tightly against the front cover. Secure it in place with ⑪ **M4 countersunk screws**.

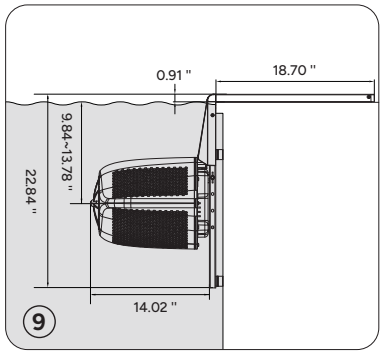

Ensure an installation depth of **9.84" to 13.78"** (distance from the water surface to the center of the Swim Jet) to achieve the optimal swimming experience.

5.4 Control Box Installation Diagram for the Swim Jet

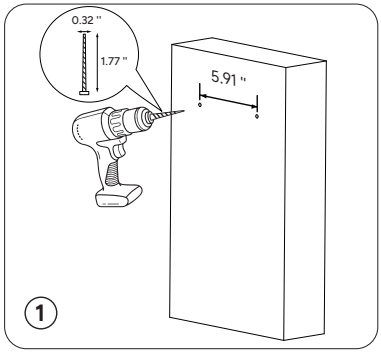

Drill two horizontal holes in the wall with a center-to-center spacing of **5.91"**. Recommended drill bit diameter: **5/16"**; hole depth: **1.77"**.

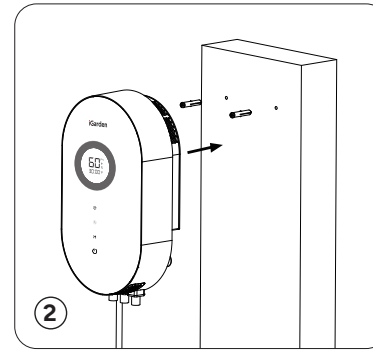

Insert ⑨ **Expansion Plugs Φ8×40** into the holes, then install the ⑩ **M5×40 Self-Tapping Screws**.

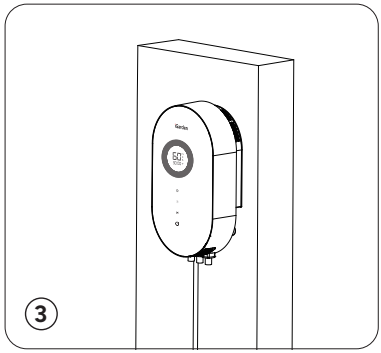

Align the mounting holes on the control box with the screws and hang the unit securely.
Ensure the orientation of the control box allows the three connectors to face downward.

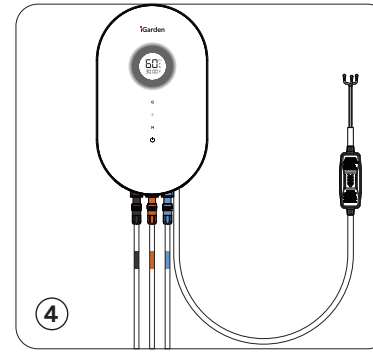

Connect the Swim Jet cable to the three connectors by matching the corresponding colors.
The cable plug colors are: **Black / Orange / Blue**.

5.5 Electrical Installation

Power Requirements for Swim Jet P Series: 110V–120V

Warning:

All wiring or any modifications to the wiring of the Swim Jet P Series must be performed by a licensed electrician in accordance with all applicable federal, state, and local codes.

The Swim Jet P Series is equipped with a 16.4 ft (5 m) power cord that includes a GFCI (Ground Fault Circuit Interrupter) .

Note:

Make the electrical connection directly as shown in the diagram below, from the field conduit to the terminal block.

- For use with copper conductors only
- Suitable for field wiring

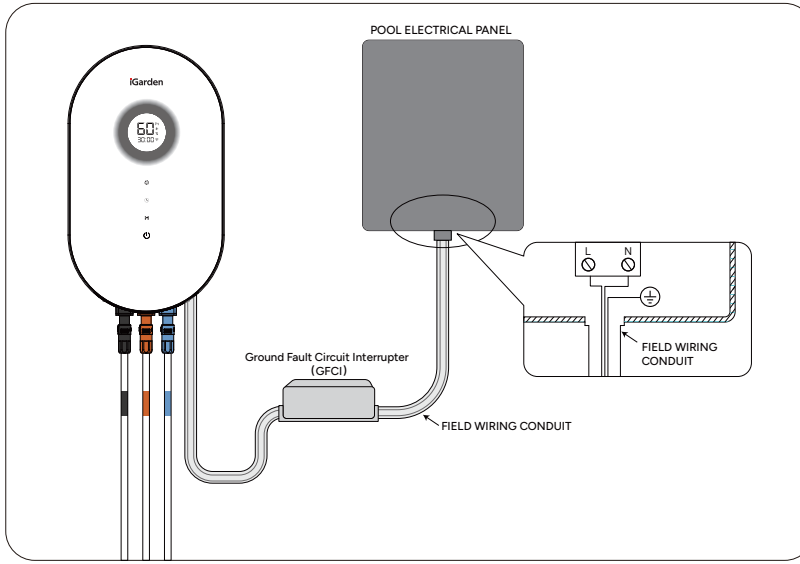

5.6 Mounting Bracket Configuration Guide

Depending on the structure of the pool wall, different bracket assemblies may be selected:

5.6.1 Pool Walls Without Inclination

Pool deck edge thickness ≤ 0.59":

- Install part ⑧ vibration-damping pads (Φ30 × 15) on the back of the bracket assembly.

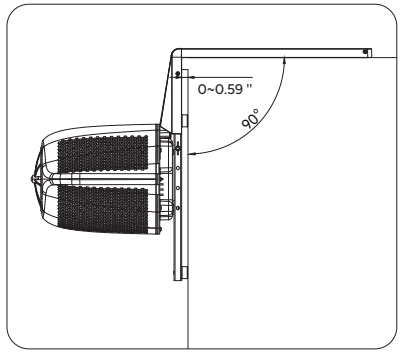

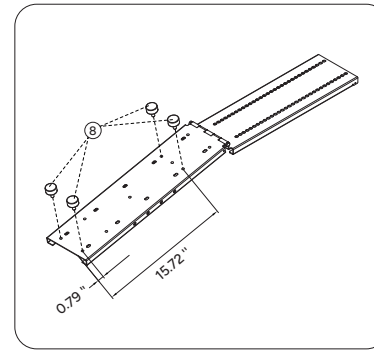

• If the pool wall has a slight inclination (≤2°), install ⑭ Shock-Absorbing Pad Φ30×2 and ⑮ Shock-Absorbing Pad Φ30×5 on top of the ⑧ Shock-Absorbing Pad Φ30×15, as shown in the diagram.

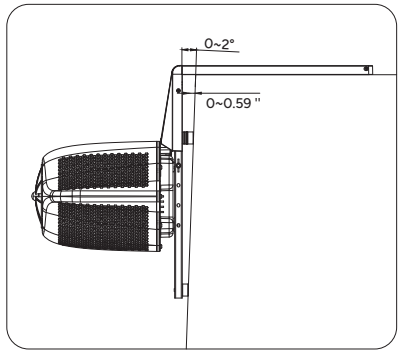

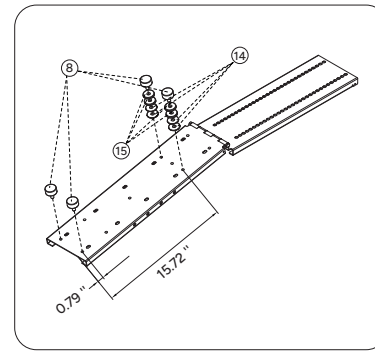

If the pool deck edge thickness is greater than 0.59" and less than or equal to 0.79", install both ⑧ Shock-Absorbing Pad Φ30×15 and ⑮ Shock-Absorbing Pad Φ30×5 together.

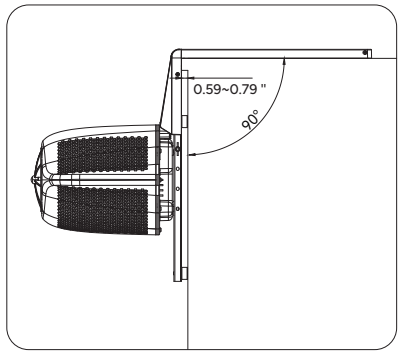

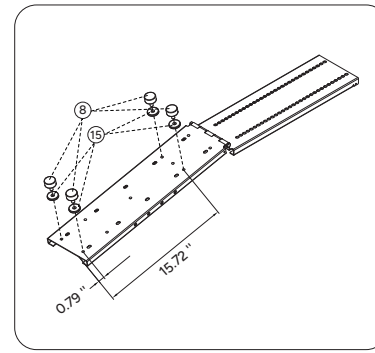

5.6.2 Pool Walls with Greater Inclination (2° ≤ Incline ≤ 7°)

Use a combination of ⑧ Shock-Absorbing Pads and ⑰ Adjustable Foot Pad for installation.

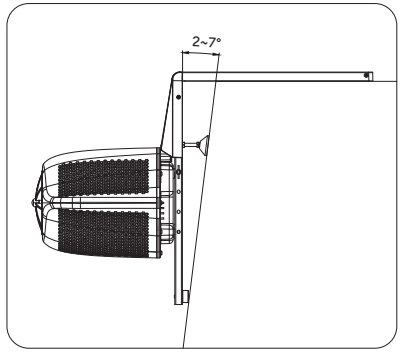

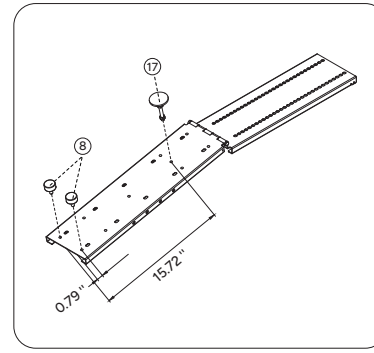

5.7 Non-Penetrating Bracket Installation for the Swim Jet

For installations mounted on the pool wall, a non-penetrating simplified bracket can be used.

5.7.1 Exploded View of the Swim Jet (Non-Penetrating Bracket)

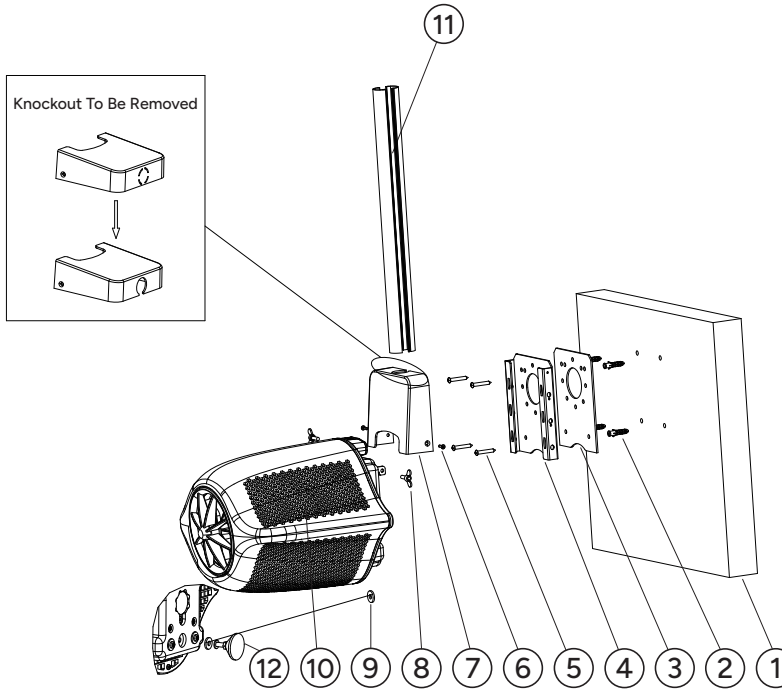

5.7.2 Accessories List

No.	Item Name	Quantity	Remarks
1	Pool Wall	–	
2	Plastic Expansion Plug Φ8×40	4	
3	Simplified Bracket Gasket (EPDM)	1	
4	Simplified Mounting Bracket (316L Stainless Steel)	1	
5	Phillips Countersunk Self-Tapping Screw M5×40 (316L)	4	Use M5×40 for concrete, M6×40 for hollow brick
6	Countersunk Screw M4×12 (316L)	2	

⑦	Decorative Cap (Simplified)	1	
⑧	Wing Screw M6×20	2	
⑨	Cylindrical Shock-Absorbing Pad (EPDM)	1	
⑩	Swim Jet	–	
⑪	Straight Conduit	–	To be configured based on actual installation requirements
⑫	Adjustable Foot Pad	–	Pre-installed on the Jet

5.7.3 Installation Diagram

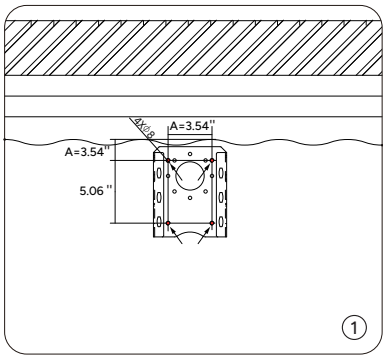

Determine the water surface level and mark the distance **A = 3.54"** between the left-side hole of the bracket and the water surface. Then, mark the positions of the four mounting holes.

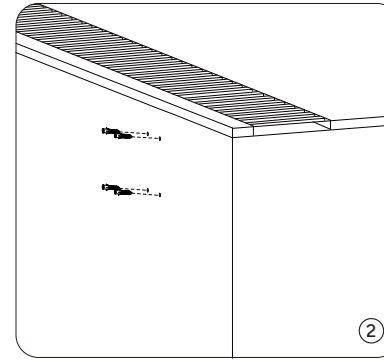

Drill four holes at the marked positions using a **Φ5/16"** drill bit to a depth of **2.0"**. Insert the plastic expansion plugs into the holes, then clean the surface of the pool wall.

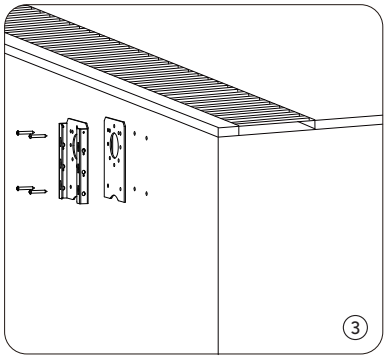

Place ④ Simplified Mounting Bracket and ③ Sealing Gasket against the pool wall, then secure them using ⑤ Phillips Pan Head Self-Tapping Screws.

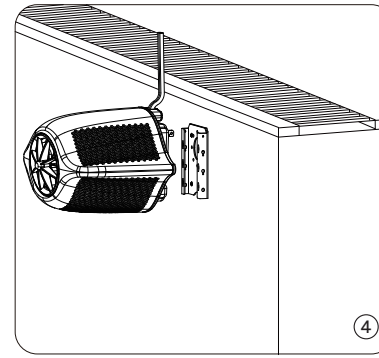

Hang the Swim Jet onto the mounting bracket. Adjust the ⑫ **Adjustable Foot Pad** and the quantity of ⑨ **Cylindrical Shock-Absorbing Pads** to ensure the Swim Jet remains level after installation.

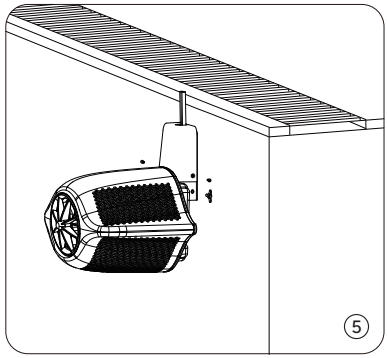

Secure the Jet using ⑧ Wing Screws. Position the simplified decorative cap properly, press it flat, then slide it into place. Fasten it with countersunk screws.

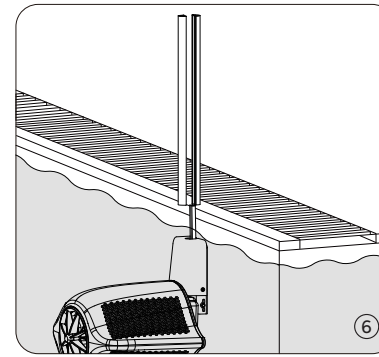

Pass the cable through the straight conduit. Fill the pool with water up to the designated water level.
It is recommended that the center of the Swim Jet be positioned **9.8"** below the water surface.

6 How to use Swim Jet P Series

Please wear a swim cap and goggles.

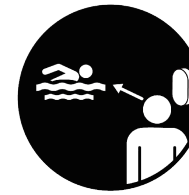

Before starting, ensure that both the Jet and the pool are within your line of sight.

Do NOT handle any connectors or the corresponding circuit breaker with wet hands.

Maintain a minimum distance of 20 inches between your body and the Swim Jet while it is operating.

6.1 Pre-Use Checklist

Before using the Swim Jet, please follow these steps:

a. Power and Connection Check

- Ensure the power is turned off.
- Inspect all cables: Make sure all connections are secure and undamaged. If there is any damage, do not use the Swim Jet. Contact iGarden Customer Support or your local distributor for warranty service or your local iGarden distributor for replacement.

b. Equipment and Pool Condition

- Ensure the Jet is fully submerged.
- Remove any obstacles: Confirm that the pool, especially the area near the Swim Jet, is free of any obstructions to allow smooth operation.

c. Safety Check

- Ground Fault Protection: Confirm that the GFCI (Ground Fault Circuit Interrupter) on the power cord is functioning properly.
- Make sure you are wearing a swim cap and goggles.

d. Operation Readiness

- Startup Visibility: Ensure the pool and Swim Jet are within your line of sight before powering on. Keep the area around the inlet and outlet clear of people.
- Control Panel: Check that the control panel is functioning correctly.

e. Important Safety Notes

⚠ Do not operate the Swim Jet with wet hands or plug/unplug the power cord with wet hands to avoid electric shock.

- Stay at least 20" (50 cm) away from the Jet during operation.

Once all safety checks are confirmed, the Swim Jet can be powered on.

6.2 Control Panel Overview

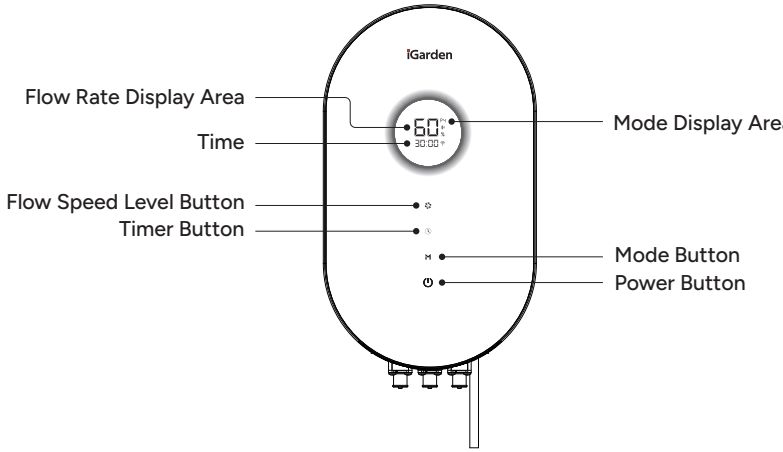

Button Name.	Function	Description
Power Button ⏻	Power On	After power-up, press and hold the power button for 2 seconds to turn on the unit. The system defaults to Free Mode upon startup.
	Power Off	Press and hold the power button for 2 seconds to turn off the unit. The current flow speed will be saved and automatically restored at next startup.
	Pause	Press during operation to enter Pause mode. If no operation is performed in pause mode after 30 minutes, the Swim Jet will shut down automatically.
	Resume	Press again in Pause mode to resume the previous operating state.

Mode Button	Switch Mode	Press to cycle through modes: Free Mode (P0), Training Modes (P1–P4), and Entertainment Mode (P5).
Timer Button	Set Timer	Press to enter timer setting mode.
	Adjust Timer	Press to select one of six time settings: 15 min, 30 min, 45 min, 60 min, 75 min, or 90 min.
Flow Speed Button	Adjust Flow Speed	Press to switch between five flow levels: 20%, 40%, 60%, 80%, and 100%.

6.3 Mode Descriptions

6.3.1 Overview of Modes

Mode Type	Mode ID	Duration	Speed Range (%)	Features
Free Mode	P0	Continuous	20% - 100%	Manually adjustable speed levels (20%, 40%, 60%, 80%, 100%). No time limit. Suitable for daily relaxation or technique training.
Training Mode: Light Intensity	P1	15 min	20% - 35%	Low-speed fluctuations with intermittent changes. Suitable for beginners and recovery training.
Training Mode: Moderate Intensity	P2	20 min	45% - 70%	Moderate and intermittent speed changes between 45% and 70%. Alternating intensity is more distinct.

Training Mode: High Intensity	P3	25 min	70% - 85%	High-speed intermittent output. Suitable for intensive strength training.
Training Mode: Endurance	P4	30 min	45% - 65%	Designed for endurance. Focuses on sustained mid-level output.
Entertainment Mode	P5	Continuous	30% - 100%	Rapid speed transitions with acceleration 100% faster than other modes. Simulates a realistic surfing experience with a playful focus.

Note:

In Entertainment Mode, the water flow changes rapidly and may have a certain level of impact. For safety, novice swimmers may use swim aids, such as swim rings, arm floats, or back float boards—in addition to a swim cap and goggles.

6.3.2 Detailed Flow Speeds by Mode

The Swim Jet P Series offers five operating modes:

- Training Modes (P1–P4)
- Entertainment Mode (P5)
- Free Mode (P0)

Modes can be selected by pressing the Mode Button M. You can switch between different modes using the Mode Button, with each mode offering a specific flow speed range:

P0 (Free Mode): Flow speed range: 20% – 100%

Duration	No fixed time limit
Flow Speed	20%,40%,60%,80%,100%

P1 (Interval Mode: Light Intensity): Flow speed range: 20% – 35%

Time	0-2min	3-5min	6min	7-9min	10min	11-13min	14-15min
Speed	20%	30%	20%	35%	20%	30%	20%

P2 (Interval Mode: Moderate Intensity): Flow speed range: 45% – 70%

Time	0-3min	4-6min	7-8min	9-12min	13min	14-17min	18-20 min
Speed	45%	55%	45%	70%	45%	55%	45%

P3 (Interval Mode: High Intensity): Flow speed range: 70% – 85%

Time	0-5min	6-9min	10min	11-14min	15min	16-20 min	21-25min
Speed	70%	80%	70%	85%	70%	80%	70%

P4 (Endurance Training Mode): Flow speed range: 45% – 65%

Time	0-7min	8-24min	25-30min
Speed	45%	65%	45%

P5 (Entertainment Mode): Flow speed range: 30% – 100%

Duration	No fixed time limit
Flow Behavior	Rapid switching between low and high speeds

6.4 Speed Adjustment

Press the Flow Speed Level Button to cycle through speed levels: 20% / 40% / 60% / 80% / 100%.

In Training Modes P1–P4, pressing the Flow Speed Level Button will adjust the speed for the current interval only; it will not affect the overall training program.

Note: Speed adjustment is not available in Entertainment Mode.

6.5 Timer Setting

Press the Timer Button to enter the timer setting mode. Press again to select the desired workout duration: 15 / 30 / 45 / 60 / 75 / 90 minutes.

You can also select from five speed levels: 20% / 40% / 60% / 80% / 100%.

If no operation is performed for 3 seconds, the timer mode will automatically activate and the countdown will begin.

When the countdown ends, the display will flash the total run time and speed before switching to Free Mode.

During timer operation, speed can be adjusted at any time.

To exit timer mode, press the Mode Button to switch modes. (This applies to other modes as well.)

7 Remote Control

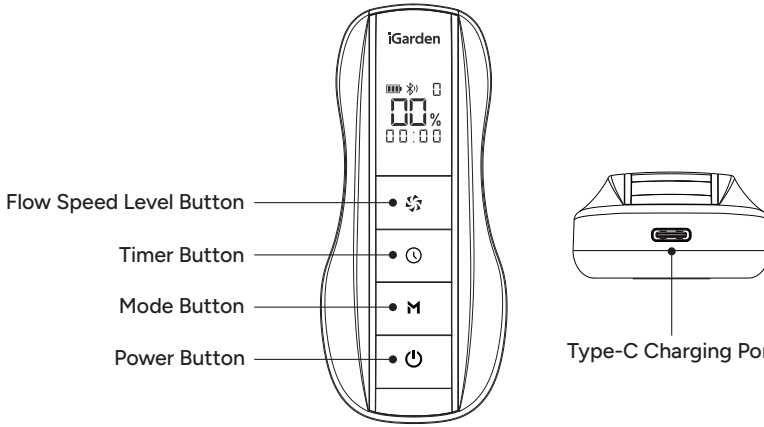

7.1 Power On

7.1.1 Operating Steps

- When the remote control is off, press and hold the Power Button on the remote for 2 seconds. The screen will light up and display the startup interface.
- Once Bluetooth is successfully connected, the screen will display real-time information from the control box, including current flow speed, runtime, operating mode, and Bluetooth connection status.

7.1.2 Remote Control Placement

- The remote control can be magnetically attached to the right side of the control box or the upper cable cover. Both positions have designated magnetic zones marked with identification stickers for easy recognition and placement.

7.1.3 Bluetooth Connection Troubleshooting

- If Bluetooth fails to connect, the screen will freeze and the Bluetooth icon will flash rapidly, indicating that the device cannot currently be controlled.

  In this case, move closer to the control box (signal source) to allow automatic reconnection. Once connected, the screen will display real-time information from the control box.

- When powered on, all button operations on the remote mirror those of the control box. Information displayed on both devices is synchronized in real time.

7.1.4 Transmission Range

The effective Bluetooth transmission range between the remote control and the control box is 65.6 ft (20 meters) in an ideal, unobstructed environment.

Actual range may vary due to obstacles or signal interference. For best performance, use within line of sight whenever possible.

7.1.5 Handling Water Exposure

- If the remote falls into the pool, retrieve it promptly and follow these steps:

  1. Shake off excess water: Gently shake the remote (with the opening facing downward) to remove water from ports and gaps.

  2. Wipe the surface: Use a dry cloth to absorb moisture from the outer shell, charging port, and other areas.

  Caution: Do not power on or charge the remote while moisture remains inside. Do not use high heat to dry the device.

7.2 Power Off

7.2.1 Operating Steps

- Press and hold the Power Button ⏻ for 2 seconds to power off the remote; the screen will turn off.

- If the control box is powered on, turning off the remote will also power off the control box.

7.3 Battery Management

The battery status bar displays three segments. When only one bar remains, please recharge promptly.

Charging Method:

- Use a Type-C charging cable. Insert one end into the charging port at the bottom of the remote, and the other end into a power adapter. Ensure all connections are secure.

Charging Progress:

- During charging, the battery status bar will show the progress. When fully charged, all battery segments will be lit.

Charging Temperature Range:

- Charging is prohibited in extreme temperatures. Recommended charging temperature: 0°C to 45°C (32°F to 113°F).

Maximum Charging Time:

- Do not exceed 24 hours of continuous charging.

7.4 Storage Requirements

To maintain the performance and longevity of the remote control, please store it within the following temperature ranges:

- Short-term storage (within 1 month): -20°C to 45°C (-4°F to 113°F)
- Mid-term storage (within 3 months): -20°C to 35°C (-4°F to 95°F)
- Long-term storage (within 1 year): -20°C to 25°C (-4°F to 77°F)

Note: For storage periods exceeding 3 months, it is recommended to charge the battery to approximately 75% (2 bars) to preserve battery health.

7.5 Remote Re-Pairing

If replacing the remote or the control box, follow these steps to re-pair the devices:

Before pairing:

- Make sure the old remote is out of Bluetooth range or clear its pairing information.
- To clear old pairing info: With the control box turned off, press and hold both the Mode Button and Timer Button on the remote for 2 seconds.

Pairing Steps:

1.Turn on the control box. Press and hold both the Mode Button and Timer Button on the control box for 2 seconds to enter Bluetooth pairing mode.

2.Keep the remote within Bluetooth range of the control box.

3.With the remote turned on, press and hold both the Mode Button and Timer Button on the remote for 2 seconds to enter pairing mode.

• The Bluetooth icon will flash slowly during pairing.

• Once paired successfully, the icon will stay solid.

If pairing is not completed within 1 minute, the Bluetooth icon will return to fast flashing mode.

Tip:

After successful pairing, the remote will automatically connect to the control box each time it is powered on.

• A solid Bluetooth icon indicates a successful connection.

• A flashing icon indicates connection failure.

8 APP Control

8.1 Downloading the APP

Search for "iGarden" in your app store to download.

• Android users: Search and download via Google Play.

• iOS users: Search and download via the App Store.

8.2 Account Registration and Login

After downloading, you can register and log in using your email address or mobile phone number.

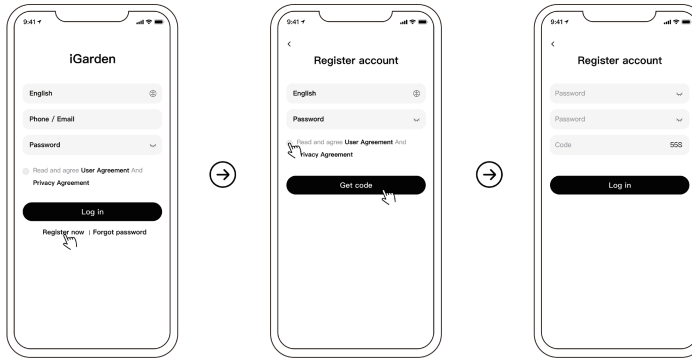

8.3 Adding a Device and Network Pairing

8.3.1 Bluetooth Pairing Method

After turning on the control box, press and hold the Timer Button and Flow Speed Button simultaneously for about 2 seconds until the Wi-Fi icon begins to flash slowly, indicating that the device has entered pairing mode.

Open the iGarden APP and tap the “Add Device” button.

Follow the on-screen instructions in the app to complete the device binding process. Once successfully paired, your device will appear on the Home > My Garden Screen.

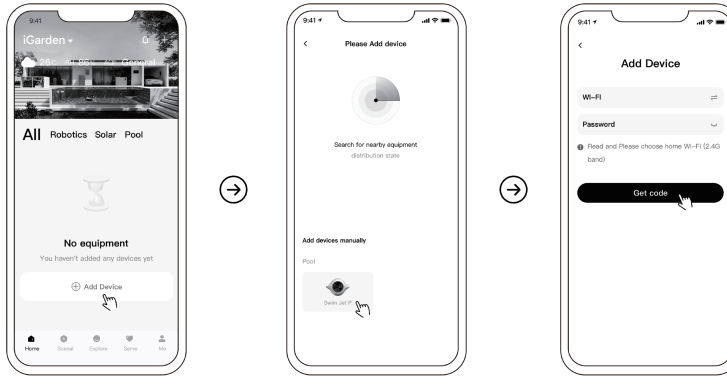

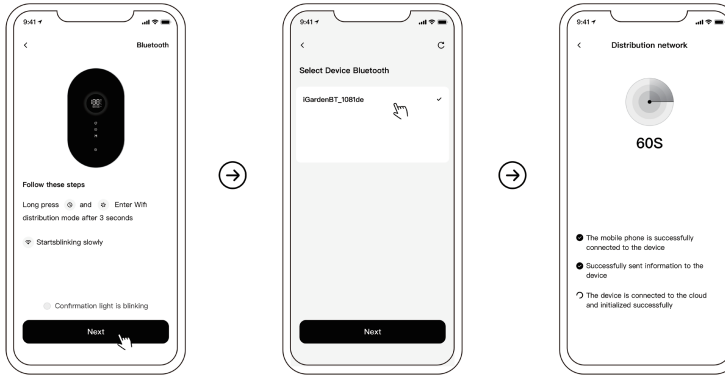

8.3.2 Wi-Fi Hotspot Pairing Method

The pairing steps are the same as the Bluetooth method.Select “Wi-Fi Hotspot Pairing” in the app and follow the on-screen instructions to complete the binding process.

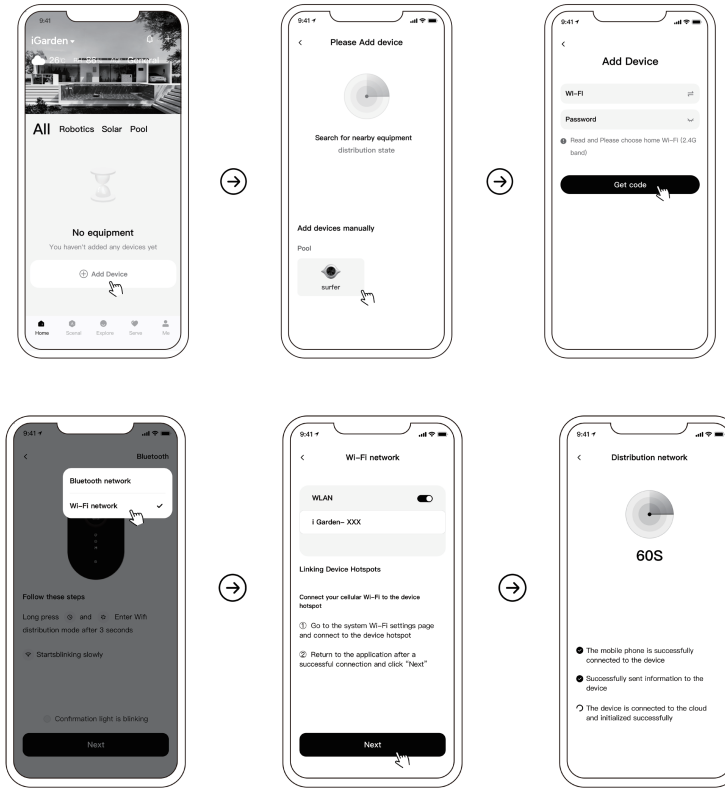

8.4 Interface Functions

8.4.1 Mode Selection

After powering on the device via the app, it will default to Free Mode.The operation interface is as shown below, allowing users to switch modes, adjust speed, start or stop the device, and perform other controls as needed.

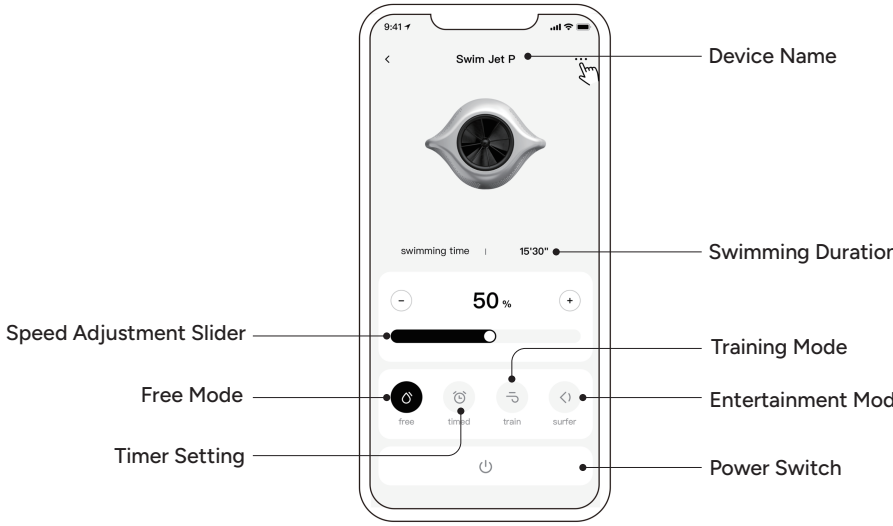

8.4.2 Device Sharing

As the garden administrator, you can share a specific device with other users via the Device Details page in the app.

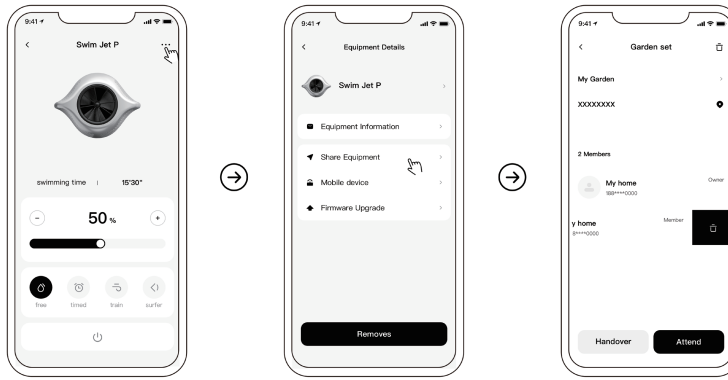

8.4.3 Fault Alerts

During product operation, if a malfunction occurs, the device control page or message center will display the fault name and corresponding error code.

If the issue cannot be resolved on your own, please contact iGarden customer support:

- Email: support@igarden.ai
- Toll-free:

  US: +1-888-880-3320

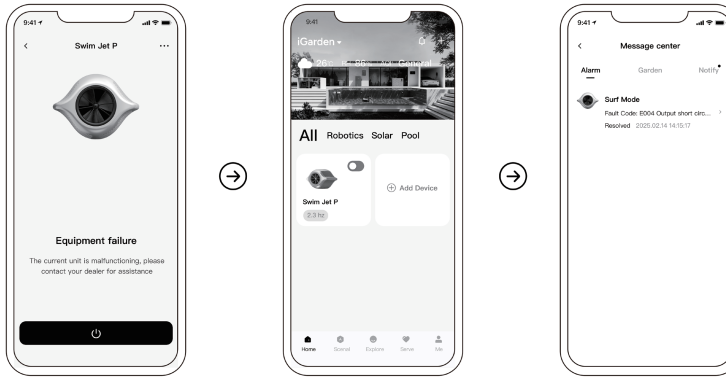

9 Product Maintenance and Care

When the product will not be used for an extended period, please disassemble and store the unit indoors.

1. Turn off the power.
2. Disconnect the power cord.
3. Disconnect the jet cable from the bottom of the control box.
4. Remove the Jet from the pool and allow it to dry completely.
5. Store both the Swim Jet and the control box in a dry indoor environment.

Special Winter Storage Instructions:

In winter, lower the pool water level below the Jet to ensure the unit is not submerged.

⚠ Warning:

When storing the Swim Jet, the cable plug must be covered with a protective cap. Do not leave it exposed to air.

10 Malfunctions and Protection

10.1 Fault Detection

- **Fault Occurrence:** When the Swim Jet detects a fault (excluding deceleration strategies), the system will automatically shut down and display an error code.
- **Auto Recovery:** After 30 seconds, if the fault condition is cleared, the device will automatically resume its previous operating state. If the fault recurs, the system will shut down again and display the error code, continuing to attempt recovery every 30 seconds until the issue is resolved.
- **Fault Lock:** If a fault occurs three times within one hour, the system will enter a locked state and will not recover automatically. Manual power-off and restart by service personnel will be required.

If multiple faults occur, users can press the control buttons to cycle through fault messages. If no input is given, the screen will automatically switch displayed faults every **5 seconds**.

The fault screen is structured as follows:

- Top right corner 1 1: Total number of faults
- Center 0 1: Current fault number
- Bottom E0 0 1: Fault code.

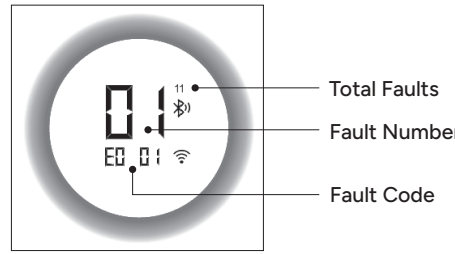

10.2 Fault Code Table

The fault codes are listed as follows:

No.	Fault Code	Description	Cause	Solution
1	E0 01	DC Bus Voltage Abnormal	Bus voltage is outside the normal operating range (too low or too high).	Disconnect power and check if the power plug is loose. If securely connected, contact iGarden Customer Support or your local distributor for assistance.
2	E0 02	Output Overcurrent Fault	Peak output current exceeds the preset maximum value.	Contact iGarden Customer Support or your local distributor for assistance.
3	E0 03	Output Current Imbalance	Imbalance across the three output current phases.	Contact iGarden Customer Support or your local distributor for assistance.
4	E0 04	Output Short Circuit	Short circuit or high current between control box and Jet.	Contact iGarden Customer Support or your local distributor for assistance.
5	E0 05	Output Phase Loss	Loose connection or internal wiring issue.	Disconnect power. Check for cable damage or objects in the impeller. Contact iGarden for assistance if needed.
6	E0 06	Motor Stall	Motor is jammed or obstructed.	Inspect the motor for objects and remove any obstructions.
7	E0 07	Motor Dry-Run Protection	Motor is not fully submerged; shuts down after 30 seconds.	Ensure the motor is fully submerged. Installation depth should be 250–350 mm (9.8"–13.8") from water surface to unit center.
8	E1 01	MOS Overtemperature	MOSFET temperature on drive board is too high.	Contact iGarden Customer Support or your local distributor for assistance.
9	E1 02	Chassis Overtemperature	Internal temperature of control box is too high.	Disconnect power. Ensure adequate ventilation. If issue persists, contact iGarden Customer Support for assistance.
10	E2 01	Temperature Sensor Fault	Sensor on drive board or display board is damaged.	Contact iGarden Customer Support or your local distributor for assistance.
11	E2 02	Motor Drive Fault	Drive board failure or motor control error.	Contact iGarden Customer Support or your local distributor for assistance.
12	E2 03	Drive Board Communication Fault	No communication between drive board and main control for 30 seconds.	Contact iGarden Customer Support or your local distributor for assistance.

10.3 Common Issues and Solutions

Issue	Possible Cause	Solution
Loud Noise	The Swim Jet is not fully submerged in water.	• Ensure the unit is submerged below the water level. • Recommended installation depth (from water surface to unit center): 250–350 mm (9.8"–13.8")
Weak Water Flow	• The Swim Jet is not level with the water surface. • Motor is not functioning properly.	• Check and adjust the position of the adjustable foot pad. • If the motor is not working, please contact iGarden.
No LCD Display	• Control box is not connected or the switch is turned off. • Display panel is not receiving signal.	Ensure the control box is properly connected and the switch is turned on.

10.4 Speed Reduction Protection

To ensure safe operation, the control box is equipped with the following three speed reduction protection mechanisms:

1. MOSFET Overtemperature Speed Limiting

- When the temperature of the MOSFET exceeds the preset threshold, the system will automatically reduce speed.
- During this state, the interface will alternate between the normal operating screen and a chassis high temperature warning screen displaying code A1.

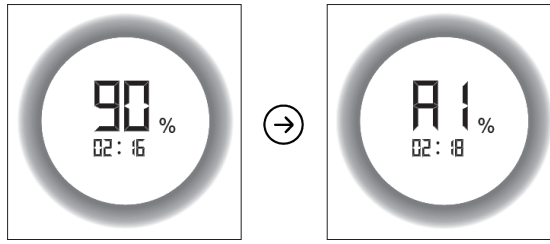

- When the MOSFET temperature becomes excessively high, the system will shut down and display fault code E1 01.

2. Chassis Overtemperature Protection

- When the internal temperature of the control box exceeds the preset threshold, the system will automatically reduce speed.

During this condition, the interface will alternate between the normal operating screen and a chassis high temperature warning screen displaying code A2.

- If the temperature continues to rise, the system will shut down and display fault code E1 02.

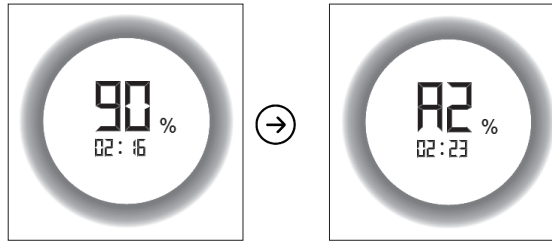

3. Output Overcurrent Protection

- When the output current exceeds the preset threshold, the system will automatically reduce speed.

During this state, the interface will alternate between the normal operating screen and an overcurrent warning screen displaying code A3.

- If the current continues to rise, the system will shut down and display fault code E0 02.

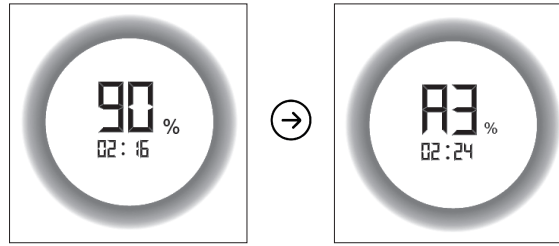

Note:

In any protection state, the device will automatically adjust its operating speed to prevent damage and ensure safe operation.

11 Warranty and Exclusion Terms

Warranty: 3 years

(The warranty covers the Jet and the control box as separate parts. Only the defective component will be replaced based on the identified issue.)

For complete warranty terms—including exclusions, service process, and limitations—please visit: https://store.igarden.ai/policies/privacy-policy

11.1 Limited Warranty

Our goods come with guarantees that cannot be excluded under the United States Consumer Laws. You are entitled to a replacement or refund for a major failure and compensation for any other reasonably foreseeable loss or damage. You are also entitled to have the goods repaired or replaced if the goods fail to be of acceptable quality and the failure does not amount to a major failure.

11.1.1 What is Covered

All quality-related defects on items sold directly by iGarden official website, Amazon iGarden direct store or iGarden's authorized resellers are covered by this limited warranty for a period specified in the warranty period table below, starting from the date of purchase. Warranties on replacements will follow the same warranty timeframe as the original defective item or 90 days, whichever is longer.

For quality-related warranty claims, iGarden will, at its sole discretion, provide one or more of the following solutions:

- Provide a brand-new unit.
- Provide replacement parts.
- Repair the product.

Products that are out of warranty are eligible for paid repair services.

11.1.2 What Is Not Covered

- Non quality-related issues after the return period has passed.
- Damage resulting from misuse or failure to follow the user manual.
- Damage caused by external sources.
- Repairs or maintenance performed by unauthorized third parties.
- Malfunctions caused by the use of non-specified accessories.
- Products without sufficient proof of purchase.
- Lost or stolen products.

- Free products.
- Items that have exceeded their warranty period.
- Items taken outside the country of purchase.

11.1.3 Limitation of Liability

To the fullest extent permitted by law, the Limited Warranty shall be void and iGarden shall have no liability, responsibility, or obligation to the Buyer with respect to the product in the event of the occurrence of any one or more of the following:

- iGarden is not responsible for the loss or disclosure of any data contained in the product.
- User mishandling, third-party interference, geological events, natural disasters, or any external causes unrelated to manufacturing defects (excluding normal wear through proper use).
- Unauthorized modifications, improper installation, operation beyond specified parameters, negligent handling, failure to perform required maintenance, use with incompatible equipment.
- Not been installed in strict compliance with the provided Installation Instructions or by a qualified professional.
- The buyer fails to or is unable to provide an invoice, receipt, or other valid documentation proving that (i) the iGarden products were installed and maintained in strict accordance with this Limited Warranty, and (ii) the warranty claim was submitted within the specified Warranty Period.

When receiving service, iGarden is responsible for loss or damage to your product only while it is in iGarden's possession or in transit, if iGarden is responsible for transportation.

For products requiring an internet connection, it is the user's responsibility to maintain a stable and reliable internet connection. In case of network issues, the user must resolve them with their service provider. Using the associated app does not replace the user's obligation to monitor and ensure the product functions as expected.

To the maximum extent allowed by law, iGarden disclaims all warranties related to the accuracy, completeness, or reliability of app data. iGarden is not liable for any direct or indirect losses, damages, or costs incurred by the user due to reliance on internet connectivity. The user agrees to hold iGarden harmless from any claims or legal actions arising from their use of, or reliance on, internet connectivity or app data.

11.2 To make a warranty claim

If the product is suspected of being defective, stop using it. Contact iGarden Customer Support via email, phone or chat in the following format.

- The buyer must provide sufficient proof of purchase.
- The defective item's serial number and/or visible proof of the defect are required.
- iGarden will attempt to diagnose and resolve the issue by phone, email, or online chat. The troubleshooting steps will be documented.
- If the issue cannot be resolved remotely, it may be necessary to return the item for quality inspection. iGarden will arrange repair or replacement service at no cost if the issue is covered by this limited warranty.

If you have any questions regarding the setup, operation, or maintenance of the Swim Jet P Series that are not addressed in this manual, please contact iGarden. iGarden can be reached via the following methods:

- Email: support@igarden.ai
- Toll-Free:

  US: +1-888-880-3320
- Web: https://www.igarden.ai
- Facebook: @iGarden US
- Instagram: @igarden_us
- X: @iGarden_US
- YouTube: iGarden_US

12 Disposal of End-of-Life Equipment

12.1 Equipment Decommissioning

Before disposing of the equipment, ensure that it is fully disconnected from the power supply. Follow the disconnection steps in the order below:

1. Turn off the power.

2. Shut off the power supply around the swimming pool.

3. Disconnect the power cord.

4. Disconnect the jet cable from the bottom of the control box.

12.2 Disposal

Dispose of the equipment in accordance with local environmental regulations.

Do not discard with household waste. Contact your local recycling or waste management authority for proper disposal procedures.

When disposing of this product, please classify it as electrical or electronic waste, or deliver it to your local waste recycling system.

By ensuring separate collection and recycling at the end of its life, the product can be handled in a way that supports human health and environmental protection.

13 Certification Standards

All Swim Jet P Series models comply with the following standards:

LVD Directive: 2014/35/EU	
EN 60335-1	
EN 60335-2-41	
EN 62233:2008	
EMC Directive: 2014/30/EU	
EN 55014-1	EN 55014-2
EN 61000-3-2	EN 61000-3-3
Swimming Pool Pumps, Filters, and Chlorinators	[UL 1081:2016 Ed.7+R:23Jul2020]
Liquid Pumps (R2024)	[CSA C22.2#108:2014 Ed.5]

iGarden

www.igarden.ai

Version: US_V2.5

Thank you for choosing our Swim Jet P Series.